FOLDABLE ALUMINUM FOOTREST

Providing maximum flexibility and stability.

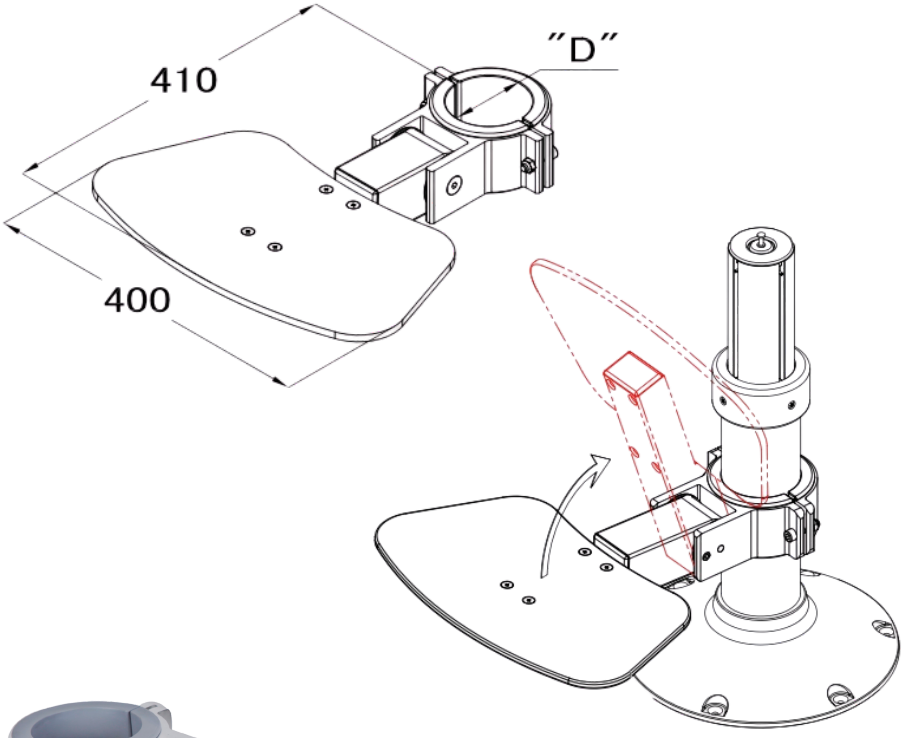

- Hand polished and bright dipped anodized aluminum construction for maximum corrosion resistance and stunning appearance
- Foldable operation to provide either comfort or space, extremely versatile
- Multiple insert bushings allows same design to be used on variety of common sized posts
- Aluminum construction provides great strength in a lightweight design that is easy to install

- **188573-AL** = foldable footrest for 2 7/8" post
- **188587-AL =** foldable footrest for 3 1/2" post

Helping deliver the boating experience your brand deserves.

www.forestarindustries.com

Available exclusively from foreStar Industries
2221 North Belcrest Ave.
Springfield, MO 65803